Blocks & Holders

French Ferrule Fuses

Modular fuse holders

CC

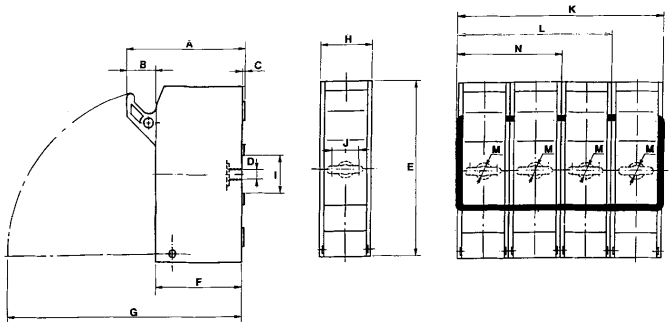

	CC8/10	CC.14	CC.22
A	40	62	71
B	9	15,5	16
C	2	1	1
D	5,5	7,25	7,25
E	77,5	94	106
F	33	45,5	55
G	100	127	148
H	17,5	27	34
I	46	20,3	20,3
J	-	15,2	18
K	77,5	112	139
L	60	85	105
M	42,5	6	6
N	-	58	71

- Fixation by screw or on symmetrical DIN rail.
- Cable size
  - CC8/CC10; 32A 1x10 mm²
  - CC14; 50A 1x25 mm²
  - CC22; 125A 1x50 mm²

E215146

Y212081

D200770

N216166

D201828

A211048

For rail mounting, screw fixing product range is delivered with symetrical DIN rail adapter. Please add 7mm to F dimension.

Poles	CATALOG NUMBER		REFERENCE NUMBER		N. mod. (17,5 mm)	Packing
	Fixation by screw	Fixation rail	Fixation by screw	Fixation rail		
CC.8: Fuse 8x31 / In max: 25A ; Vn max: 400V						
1	23002	23102	E215146	M218212	1	12
N	23000	23100	Y214634	C217697	1	12
1 + N	23010	23110	G215654	Q219250	2	6
2	23012	23112	L216164	R219780	2	6
3	23014	23114	L216670	C222458	3	4
3 + N	23018	23118	Z217188	V222980	4	3
CC.10: Fuse 10x38 / In max: 32A ; Vn max: 500V						
1	23202	23302	S211570	F215147	1	12
N	23200	23300	Y211046	W214126	1	12
1 + N	23210	23310	Y212081	M216165	2	6
2	23212	23312	N212601	M216671	2	6
3	23214	23314	A213118	A217189	3	4
3 + N	23218	23318	S213617	D217698	4	3
CC.14: Fuse 14x51 / In max: 50A ; Vn max: 690V						
1	23402	23502	S219781	Z211047	1,5	12
N	23400	23500	R219251	C201827	1,5	12
1 + N	23410	23510	D222459	T211571	3	6
2	23412	23512	W222981	Z212082	3	6
3	23414	23514	D200770	P212602	4,5	4
3 + N	23418	23518	V201314	B213119	6	3
CC.22: Fuse 22x58 / In max: 125A ; Vn max: 690V						
1	23602	23702	X214127	B217190	2	6
N	23600	23700	T213618	N216672	2	6
1 + N	23610	23710	A214636	E217699	4	3
2	23612	23712	G215148	P218214	4	3
3	23614	23714	J215656	C218732	6	2
3 + N	23618	23718	N216166	S219252	8	1

Accessories

	Poles	CAT. NUMBER CC.8	CAT. NUMBER CC.10	CAT. NUMBER CC.14	CAT. NUMBER CC.22	Packing
Handle assembly	2	23934	23934	23941	23948	one single bag of 10 pcs
	3	23935	23935	23942	23949	
	4	23936	23936	23943	23950	
Symmetrical rail adapter	1	23937	23937	23951	23951	

Accessories

	Poles	REF. NUMBER CC.8	REF. NUMBER CC.10	REF. NUMBER CC.14	REF. NUMBER CC.22	Packing
Handle assembly	2	E200771	E200771	C213120	P216167	one single bag of 10 pcs
	3	W201315	W201315	V213619	P216673	
	4	D201828	D201828	Y214128	C217191	
Symmetrical rail adapter	1	A211048	A211048	F217700	F217700	

Standards: IEC 269-2-1 / 947-3, NFC 63.210-63.001, UNE 21.103-2-1
Approvals: Bureau Veritas / Lloyd´s Register of Shipping

Fuses: See General Purpose Fuses, French Ferrule

Ferraz Shawmut

Blocks & Holders

French Ferrule Fuses

Modular fuse holders CCR

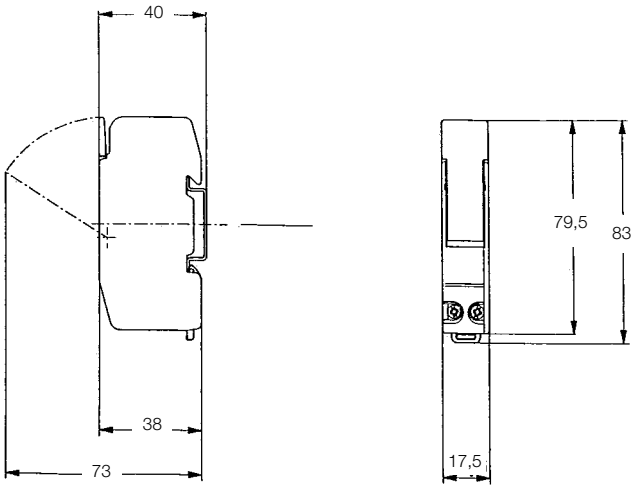

- Cable size: 1 x 10mm².
- **Compact dimensions.**
- IP20

C200769

H215655

Poles	CATALOG NUMBER	REFERENCE NUMBER	N. Mod. (17.5 mm)	Packing
CCR.8: Fuse 8x31				
In max: 25A ; Vn max: 400V				
1	23132	C200769	1	12
1 + N	23106	A218730	1	12
N	23301	Z214635	1	12
2	-	V233721	2	6
3	-	W233722	3	4
CCR.10: Fuse 10x38				
In max: 32A ; Vn max: 500V				
1	23332	N218213	1	12
1 + N	23306	H215655	1	12
N	23301	Z214635	1	12
2	-	X233723	2	6
3	-	Y233724	3	4
Multipolar assembling kit				
-	-	Z233725	-	a single bag of 10 pcs
Rail Mounting accessories				
2 Poles 3 Poles 4 Poles	-	T201313 Y226686 Z226687	-	a single bag of 50 pcs

Standards: IEC 269-2-1, IEC 269-3-1, IEC 947-3, NFC 63.210-63.001, UNE 21.103-2-1
Approvals: NF-USE

Fuses: See General Purpose Fuses, French Ferrule

Blocks & Holders

French Ferrule Fuses

Modular fuse holders MSC

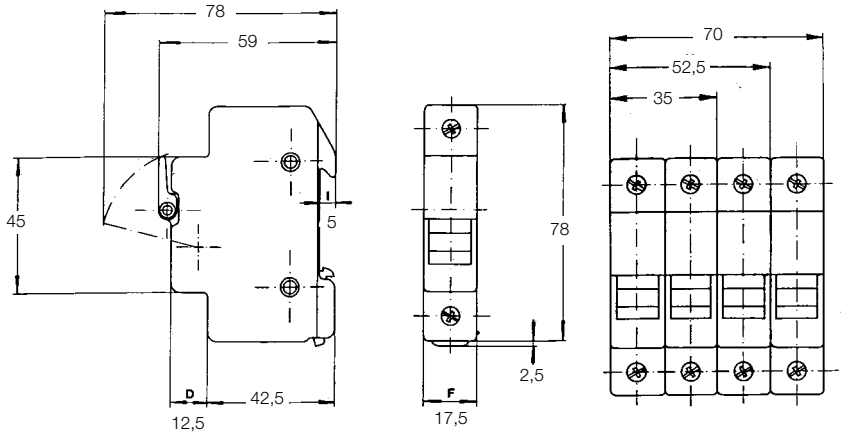

- Blown fuse indicator (120/690V)
- Cable size:
  - unipolar: 1 x 16mm²
  - unipolar + neutre: 1 x 10 mm²
- Provision for locking in versions without indicator.
- IP20

- Unipolar Uimp : 8kv
- Multipolar Uimp : 6 kv

Poles	CATALOG NUMBER		REFERENCE NUMBER		N. Mod. (17,5 mm)	Packing
	Standard w/o LI	+ light indicator	Standard w/o LI	+ light indicator		

MSC 8:Fuse 8x31

In max: 25A ; Vn max: 400V

W213620

1	24002	24004	T219253	F222461	1	12
1 + N	24010		B211049		2	6
2	24012		R212604		2	6
3	24014		W213620		3	4
3 + N	24016		C214638		4	3
4	24019		Q216168		4	3
N	24000		Q218215		1	12

X201316

Phase + neutral (1mod.)

1 + N	24006	24008	F200772	X201316	1	12
3 + N	24018		J215150		3	4

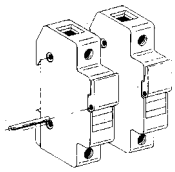

Assembly pin

Poles	CATALOG NUMBER	REFERENCE NUMBER	Packing
2	14030	G215125	one single bag of 10 pcs
3	14031	Q216145	
4	14032	A217166	

Standards: IEC 269-2-1/947, NFC 63.001/63.210, UNE 21103-2-1, 269-2-1, 947-3
Approvals: Bureau Veritas / Lloyd´s Register of Shipping

Fuses: See General Purpose Fuses, French Ferrule

Ferraz Shawmut

Blocks & Holders

French Ferrule Fuses

Modular fuse holders USM - MSC

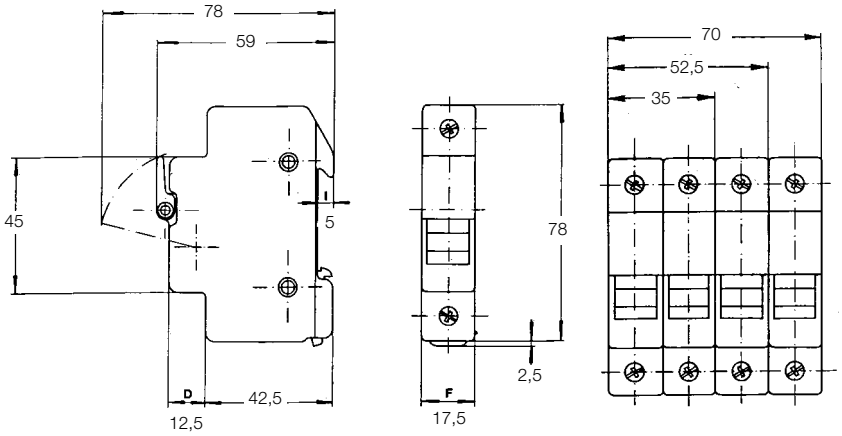

- Blown fuse indicator (120/690V)
- Cable size:
  - unipolar: 1 x 16mm²
  - unipolar + neutre: 1 x 10 mm²
- Provision for locking in versions without indicator.
- IP20

MSC

- Unipolar Uimp : 8kv
- Multipolar Uimp : 6 kv

W219784

Y201317

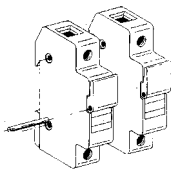

Poles	CATALOG NUMBER		REFERENCE NUMBER		N. Mod. (17,5 mm)	Packing
	Standard w/o LI	+ light indicator	Standard w/o LI	+ light indicator		
MSC 10: Fuse 10x38						
In max: 32A; Vn max: 690V						
1	24202	24204	Q216674	W219784	1	12
1 + N	24210		C212085		2	6
2	24212	24213	E213122	K215151	2	6
3	24214		M215659		3	4
3 + N	24216		E217193		4	3
4	24219		F218735		4	3
N	24000		Q218215		1	12
Phase + neutral (1mod.)						
1 + N	24206	24208	Y201317	C211050	1	12
3 + N	24218		S218217		3	4

Assembly pin

Poles	CATALOG NUMBER	REFERENCE NUMBER	Packing
2	14030	G215125	one single bag of 10 pcs
3	14031	Q216145	
4	14032	A217166	

Standards: IEC 269-2-1/947, NFC 63.001/63.210, UNE 21103-2-1, 269-2-1, 947-3
Approvals: Bureau Veritas / Lloyd´s Register of Shipping
Fuses: See General Purpose Fuses, French Ferrule

USM

USM : **Fuse 10x38 (1-1/2"x13/32)**
In max : 30 A; Vn max 600 V

Poles	CATALOG NUMBER		REFERENCE NUMBER		N. Mod. (17,5 mm)	Packing
	Standard w/o LI	+ light indicator	Standard w/o LI	+ light indicator		
N	USN		W201131			
1	USM1	USM1I	Y213944	L214462	1	12
2	USM2	USM2I	N217523	Z218039	2	6
3	USM3	USM3I	C218548	Y219073	3	4
3 + N	USM3N	USM3NI	H222049	P219594	4	3
4	USM4	USM4I	R222793	F223312	4	3

Accessories	CATALOG NUMBER	REFERENCE NUMBER	Packing
Pin-tie handle for 2 poles	USPTH2	F201646	one single bag of 10 pcs
Pin-tie handle for 3 poles	USPTH3	C205047	
Pin-tie handle for 4 poles	USPTH4	P211383	

Blocks & Holders

French Ferrule Fuses

Modular fuse holders CMS

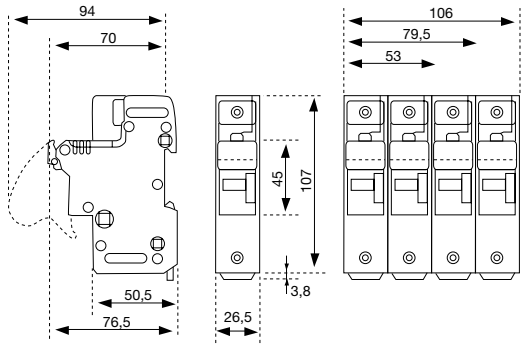

- Indicator for fuse melts and/or striker (120/690V)
- Clip for rail mounting in two positions
- Cable size max. 35 mm²
- Provision for locking
- IP 20

J211056

CMS 14: Fuse 14x51
In max: 50A; Vn max: 690V

Poles	CATALOG NUMBER				REFERENCE NUMBER				N° Mod. (17.5 mm)	Packing
	Standard w/o LI	+ Light indicator	+ Microswitch w/o LI	Micro + light ind.	Standard w/o LI	+ Light indicator	+ Microswitch w/o LI	Micro + light ind.		
N	29000				N222468				1,5	6
1	29002	29004	29020	29120	F222990	M200778	K214645	N201837	1,5	6
1 + N	29010	29011			E201323	M201836	G233525	H233526	3	3
2	29012	29013	29021	29121	J211056	C211579	R215157	K211057	3	3
3	29014	29015	29024	29124	J212091	Z212611	T215665	D211580	4,5	2
3*			29025 *	29125 *			Y216681 *	K212092 *	4,5	1
3 + N	29016	29017	29026	29126	L213128	D213627	L217199	A212612	6	1
4	29019				G214136				6	1

* 2 microswitches

P217708

Unipolar fuse holder for accessories (**)

Function	CATALOG NUMBER	REFERENCE NUMBER	N° Mod. (17.5 mm)	Packing
Equipped with blown fuse, fuse presence, prebreaking, designed to accept a microswitch	29030	P217708	1,5	6
Equipped with blown fuse only, no prebreaking, no fuse presence	29031	L223524	1,5	6

(**) Enables installation of accessory microswitch and/or indicator

Accessories (***)

M218741

F213629

Description	CATALOG NUMBER	REFERENCE NUMBER	N° Mod. (17.5 mm)	Packing
Micro Kit single pole	29051	M218741	1,5	1
Micro Block 3 poles 1 microswitch	29052	C219261	4,5	1
Block Micro 3poles 2 microswitches	29053	D219791	4,5	1
Micro assembly pins	29265	J214138		one single bag of 10 pcs
Micro enlargement pin	29264	F213629		one single bag of 10 pcs
Fuse holder assembly pins	29050	Z218223		one single bag of 10 pcs
Light indicator	29054	A225653A		1
Lock	29057	M223525		1

(***) See technical features for mounting information

Standards: IEC 269-2-1 / 947-3

Blocks & Holders

French Ferrule Fuses

Modular fuse holders CMS

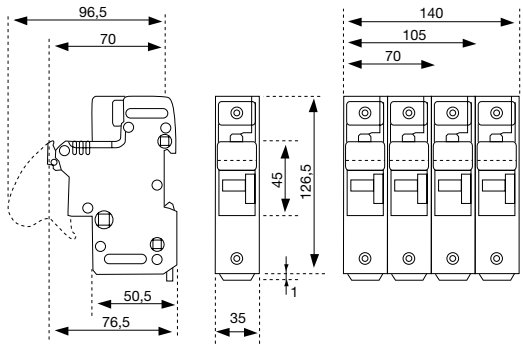

- Indicator for fuse melts and/or striker (120/690V)
- Clip for rail mounting in two positions
- Cable size max. 50 mm²
- Provision for locking
- IP 20

D219262

CMS 22: Fuse 22x58
In max: 125A; Vn max: 690V

Poles	Catalog Number				Reference Number				N° Mod. (17.5 mm)	Packing
	Standard w/o LI	+ Light indicator	+ Microswitch w/o LI	Micro + light ind.	Standard w/o LI	+ Light indicator	+ Microswitch w/o LI	Micro + light ind.		
N	29200				M213129				1,5	6
1	29202	29204	29220	29320	E213628	H214137	D219262	A216683	1,5	6
1 + N	29210	29211			L214646	S215158			3	3
2	29212	29213	29221	29321	V215666	Z216176	E219792	N217201	3	3
3	29214	29215	29224	29324	Z216682	M217200	Q222470	R217710	4,5	2
3*			29225 *	29325 *			H222992 *	B218225 *	6	1
3 + N	29216	29217	29226	29326	Q217709	A218224	P200780	P218743	6	1
4	29219				N218742				6	1

* 2 microswitches

P201838

Unipolar fuse holder for accessories (**)

Function	CATALOG NUMBER	REFERENCE NUMBER	N° Mod. (17.5 mm)	Packing
Equipped with blown fuse, fuse presence, prebreaking, designed to accept a microswitch	29230	G201325	1,5	6
Equipped with blown fuse only, no prebreaking, no fuse presence	29231	P201838	1,5	6

(**) Enables installation of accessory microswitch and/or indicator

E211581

F213629

Accessories (***)

Description	CATALOG NUMBER	REFERENCE NUMBER	N° Mod. (17.5 mm)	Packing
Micro Kit single pole	29251	E211581	1,5	1
Micro Block 3 poles 1 microswitch	29252	L212093	4,5	1
Block Micro 3poles 2 microswitches	29253	B212613	4,5	1
Micro assembly pins	29265	J214138		one single bag of 10 pcs
Micro enlargement pin	29264	F213629		one single bag of 10 pcs
Fuse holder assembly pins	29250	L211058		one single bag of 10 pcs
Light indicator	29054	A225653A		1
Lock	29057	M223525		1

(***) See technical features for mounting information

Standards: IEC 269-2-1 / 947-3

Blocks & Holders

French Ferrule Fuses

Modular fuse holders US

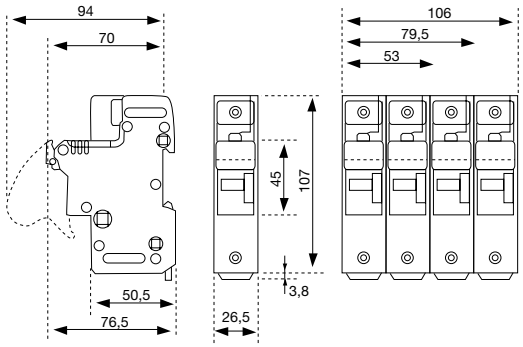

- Indicator for fuse melts and/or striker (120/690V)
- Clip for rail mounting in two positions
- Cable size max. 35 mm²
- Provision for locking
- IP 20

C227909

US 14: Fuse 14x51

In max: 50A; Vn max: 750V

All versions are equipped with blown fuse, fuse presence

Poles	CATALOG NUMBER				REFERENCE NUMBER				Nº Mod. (17.5 mm)	Packing
	Standard w/o LI	+ Light indicator	+ Microswitch w/o LI	Micro + light ind.	Standard w/o LI	+ Light indicator	+ Microswitch w/o LI	Micro + light ind.		
N	US14N				S227900				1.5	6
1	US141	US141I	US141M	US141MI	T227901	V227902	W227903	X227904	3	3
1+N	US141N	US141NI	US141NM	US141NMI	Y227905	Z227906	A227907	B227908	3	3
2	US142	US142I	US142M	US142MI	C227909	D227910	E227911	F227912	3	3
2*			US142M2	US142M2I			G227913	H227914	4.5	2
3	US143	US143I	US143M	US143MI	J227915	K227916	L227917	M227918	4.5	2
3*			US133M2	US133M2I			N227919	P227920	6	1
3+N	US133N	US143NI	US143NM	US143NMI	Q227921	R227922	S227923	T227924	6	1
3+N*			US143NM2	US143NM2I			V227925	W227926	6	1
4	US144	US144I	US144M	US144MI					6	1
4*			US144M2	US144M2I					6	1

* 2 microswitches

Accessories (***)

Y227928

F213629

Description	CATALOG NUMBER	REFERENCE NUMBER	Nº Mod. (17.5 mm)	Packing
micro kit 1 single pole	USMSW1	Y227928	1.5	1
micro block 3 poles with 1 microswitch	USMSW2	Z227929	4.5	1
micro block 3 poles with 2 microswitches	USMSW3	A227930	4.5	1
Micro assembly pins	US14PTH	J214138		one single bag of 10 pcs
Micro enlargemnt pins	US14BP	F213629		one single bag of 10 pcs
Fuse holder assembly pins	US14PAK	X227927		one single bag of 10 pcs
Light indicator	US14LIH	A225653		1
Lock	US14LOK	M223525		1

(***) See technical features for mounting information

Standards: IEC 269-2-1 / 947-3

Ferraz Shawmut

Blocks & Holders

French Ferrule Fuses

Modular fuse holders US

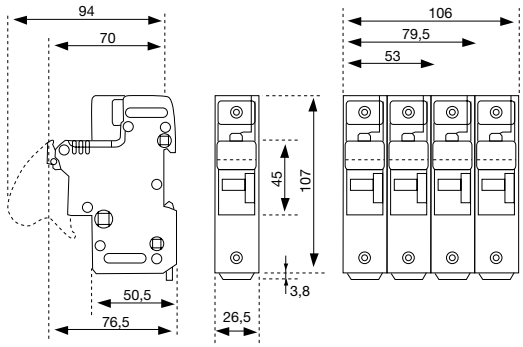

- Indicator for fuse melts and/or striker (120/690V)
- Clip for rail mounting in two positions
- Cable size max. 35 mm²
- Provision for locking
- IP 20

US 22 : Fuse 22x58

In max: 125A; Vn max: 750V
All versions are equipped with blown fuse, fuse presence

L227940

Poles	CATALOG NUMBER				REFERENCE NUMBER				N° Mod. (17.5 mm)	Packing
	Standard w/o LI	+ Light indicator	+ Microswitch w/o LI	Micro + light ind.	Standard w/o LI	+ Light indicator	+ Microswitch w/o LI	Micro + light ind.		
N	US22N				B227931				1.5	6
1	US221	US221I	US221M	US221MI	C227932	D227933	E227934	F227935	1.5	6
1+N	US221N	US221NI	US221NM	US221NMI	G227936	H227937	J227938	K227939	3	3
2	US222	US222I	US222M	US222MI	L227940	M227941	N227942	P227943	3	3
2*			US222M2	US222M2I			Q227944	R227945	3	3
3	US223	US223I	US223M	US223MI	S227946	T227947	V227948	W227949	4.5	2
3*			US133M2	US133M2I			X227950	Y227951	4.5	2
3+N	US133N	US223NI	US223NM	US223NMI	Z227952	A227953	B227954	C227955	6	1
3+N*			US223NM2	US223NM2I			D227956	E227957	6	1
4	US224	US224I	US224M	US224MI					6	1
4*			US224M2	US224M2I					6	1

* 2 microswitches

Accessories (***)

Y227928

F213629

Description	CATALOG NUMBER	REFERENCE NUMBER	N° Mod. (17.5 mm)	Packing
micro kit 1 single pole	USMSW6	G227959	1.5	1
micro block 3 poles with 1 microswitch	USMSW5	H227960	4.5	1
micro block 3 poles with 2 microswitches	USMSW4	J227961	4.5	1
Micro assembly pins	US22PTH	J214138		one single bag of 10 pcs
Micro enlargemnt pins	US22BP	F213629		one single bag of 10 pcs
Fuse holder assembly pins	US22PAK	F227958		one single bag of 10 pcs
Light indicator	US22LIH	A225653		1
Lock	US22LOK	M223525		1

(***) See technical features for mounting information

Standards: IEC 269-2-1 / 947-3

Blocks & Holders

French Ferrule Fuses

Technical features - modular fuse holders

Fuse-link table I max. / Vn

	Type	Fuse	In max.					Torque Maxi N.m.
			250	400	500	690	750	
CC	CC. 8	8 x 31		25A				2
	CC. 10	10 x 38		32A	25A			2
	CC. 14	14 x 51		50A	32A	25A		3,5
	CC. 22	22 x 58		125A	100A	80A		4
CCR	CCR. 8	8 x 31		25A				2
	CCR. 10	10 x 38		32A	25A			
MSC	MSC. 8	8 x 31		25A				2
	MSC. 10	10 x 38		32A	25A			
MSD	MSD (8x23)	8 x 23	10A					
	MSD (8x31)	8 x 31		20A				
	MSD (10x25)	10 x 25	16A					2
	MSD (10x31)	10 x 31		25A				
	MSD (10x38)	10 x 38		32A				
CMS	US4						50A	3.5
	US22						125A	4.5
	CMS. 14	14 x 51		50A	32A	25A		3,5
	CMS. 22	22 x 58		125A	100A	80A		4,5
MSM	MSM	5 x 20	16A					2

Application coefficient of multipolar fuse-links

N. mod (17,5 mm)	Fuse-link I max.
1 - 2 - 3	In
4 - 5 - 6	0,8 x In
7 - 8 - 9	0,7 x In
> 10	0,6 x In

Correction of available current based on temperature

Temperature	Available x In
20° C	1
30° C	0,95
40° C	0,9
50° C	0,8

Blocks & Holders

French Ferrule Fuses

Technical features - CMS

Table of electrical characteristics

	Rating UN(V)	Ulmp (kV)	Fuse current rating IN(A)	Maximim fuse operating current (A)				Recom-mended copper wire size (mm2)	Torque Maxi N.m.
				gG	aM	gRC	UR		
US4 CMS 14	690	8	0,25	0,25	0,25				3,5
			0,5						
			1						
			2						
			4						
			6						
			8						
			10			10	10		
			12			12	12		
			16			16	16	2,5	
			20			20	20	2,5	
			25			25	20	4	
			32			32	25	6	
			40	40	40	30	30	6	
			50	50	50	38	35	10	
US22 CMS 22	690	8	1		1				4
			2						
			4						
			6						
			8						
			10						
			12						
			16						
			20			20	20	4	
			25			25	25	6	
			32			32	42	10	
			40			40	40	10	
			50			50	50	10	
			63			51	63	16	
			80			64	60	25	
			100		100	74	70	35	
			125		100			35	

Lock installation

Reference Number M223525

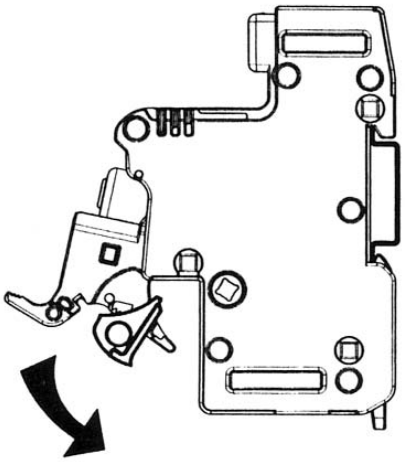

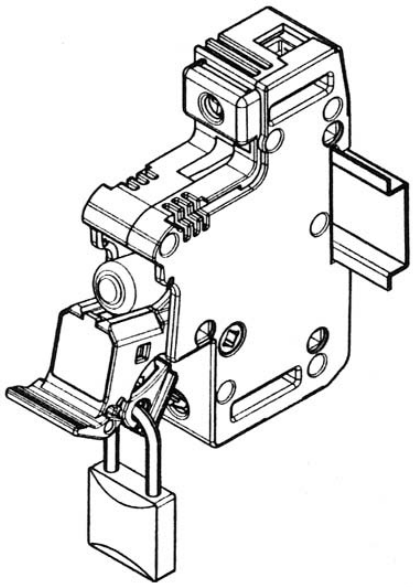

Ferraz Shawmut

Technical features - CMS

Microswitch options

Ref. Number US 14 (A227930)
Ref. Number US 22 (J227961)
Ref. Number CMS 14 (D219791)
Ref. Number CMS 22 (B212613)

2 microswitches

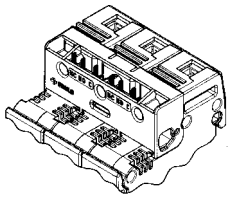

Ref. Number US 14 (3xZ227929)
Ref. Number US 22 (3xH227960)
Ref. Number CMS 14 (3xC219261)
Ref. Number CMS 22 (3xL212093)

1 microswitch

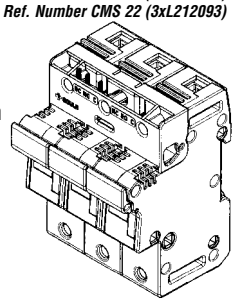

Ref. Number US 14 (Y227928+F213629)
Ref. Number US 22 (G227959+F213629)
Ref. Number CMS 14 (M218741+F213629)
Ref. Number CMS 22 (E211581+F213629)

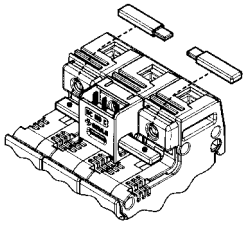

1 microswitch

Ref. Number US 14 (3xY227928)
Ref. Number US 22 (3xG227959)
Ref. Number CMS 14 (3xM218741)
Ref. Number CMS 22 (3xE211581)

3 independent microswitches

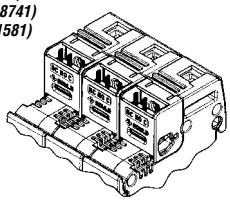

Ref. Number US 14 (Y227928+J214138)
Ref. Number US 22 (G227959+J214138)
Ref. Number CMS 14 (M218741+J214138)
Ref. Number CMS 22 (E211581+J214138)

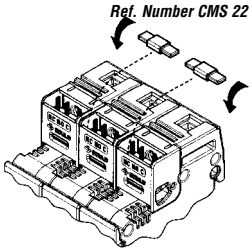

3 mechanically interconnected microswitches

Fuse holder assembly

Ref. Number US 14/22 (J214138)
Ref. Number CMS 14/22 (Z218223)

J214138
Z218223

1

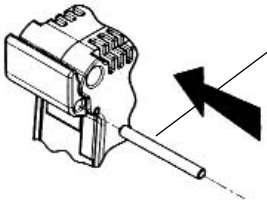

2

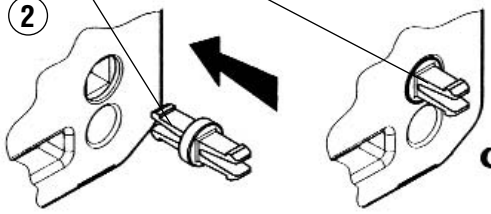

CLICK!

3

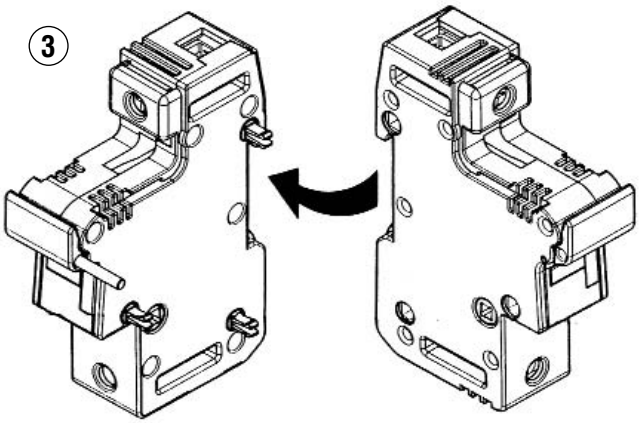

4

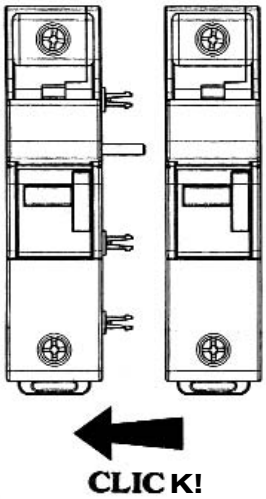

CLICK!

Technical features - CMS

Microswitch mounting instructions (*)

Reference Number US 14 (Y227928 / Z227929 / A227930)
Reference Number US 22 (G227959 / H227960 / J227961)
Reference Number CMS 14 (M218741 / C219261 / D219791)
Reference Number CMS 22 (E211581 / L212093 / B212613)

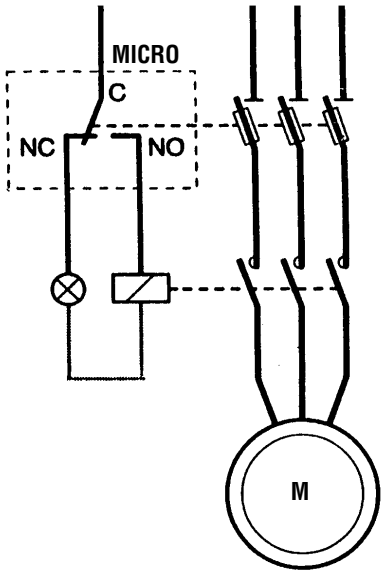

Assembly

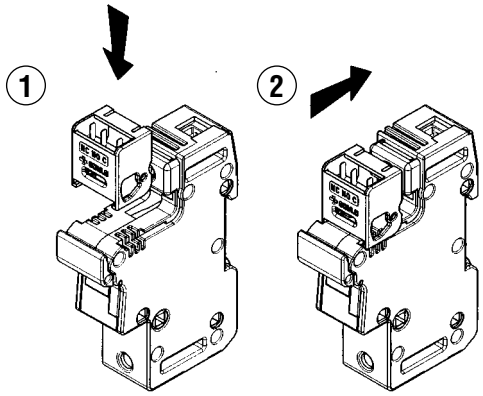

Disassembly

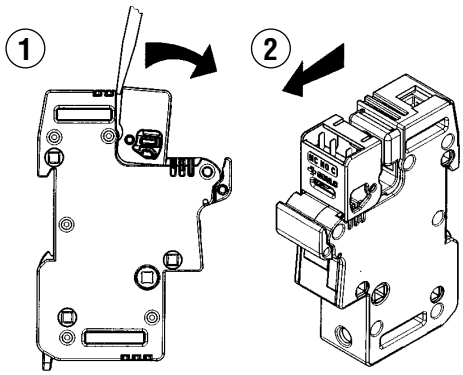

(*)Microswitch functions

Blown fuse: Fuse holder containing fuse with striker sends message when fuse blown

Prebreaking: When fuse holder opens

Presence: Sends message or not depending on fuse presence

Auxilliary microswitch caracteristics

Minimum voltage and current for operation: 10VAC/DC 100mA

Nominal current and interrupting rating(1) at 250V	6A	AC12
	3A	AC13
	0,3A	AC14
	0,1A	DC12/13/14
Nominal current and interrupting rating(1) at 2 and 24 V	6A	DC12/DC13
	5A	AC13
	2A	AC14/DC13
	0,6A	DC14

(1) According IEC947-5 standard